Datasheet

The manufacturer: **FLEXIT AS**
Televeien 15
NO 1870 Ørje
www.flexit.no

Product type: **Roof Fan**

Product name: 114672-Takvifte DVA 400 EC

	50 Hz	60 Hz	
Nominal voltage	230	230	V
Number phases	1~	1~	
Rated power	501	501	W
Max. power consumption	503	503	W
Max. current consumption	2.31	2.31	A
Max. rpm	1980	1980	1/min
Max. medium temperature	50	50	ºC
Max. ambient temperature	50	50	ºC
Min. operating temperature	-25	-25	ºC
Max. air volume	4460	4460	m³/h
Max. static pressure	920	920	Pa
Max. static efficiency	52	52	%
Sound power level outlet at optimum energy efficiency point	69	69	dB
Sound power level outlet at optimum energy efficiency point	73	73	dB
Sound power casing break out at optimum energy efficiency point			dB
IP class complete fan	IPX4		
Speed control	Urs		
Weight	18.8		kg

Drawing:

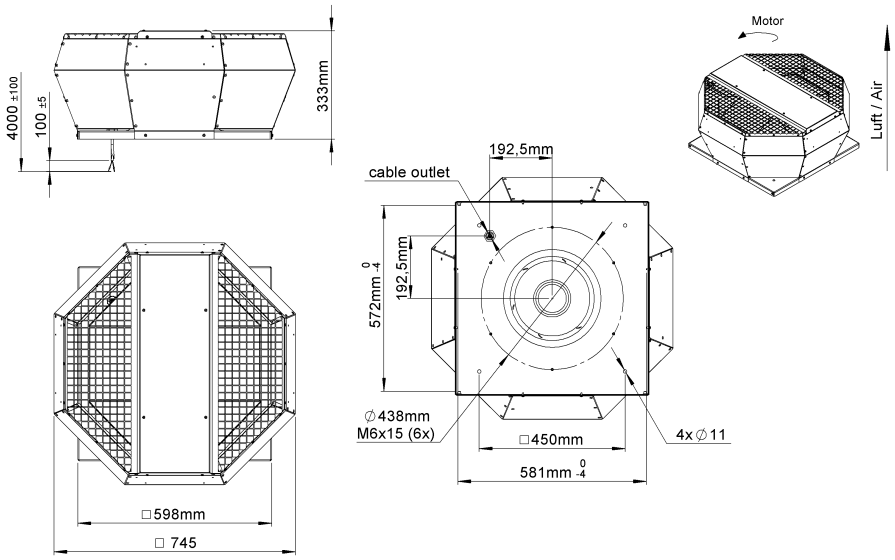
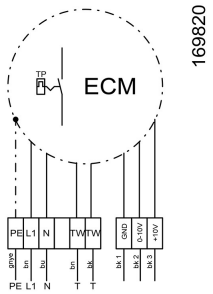
Wiring diagram: